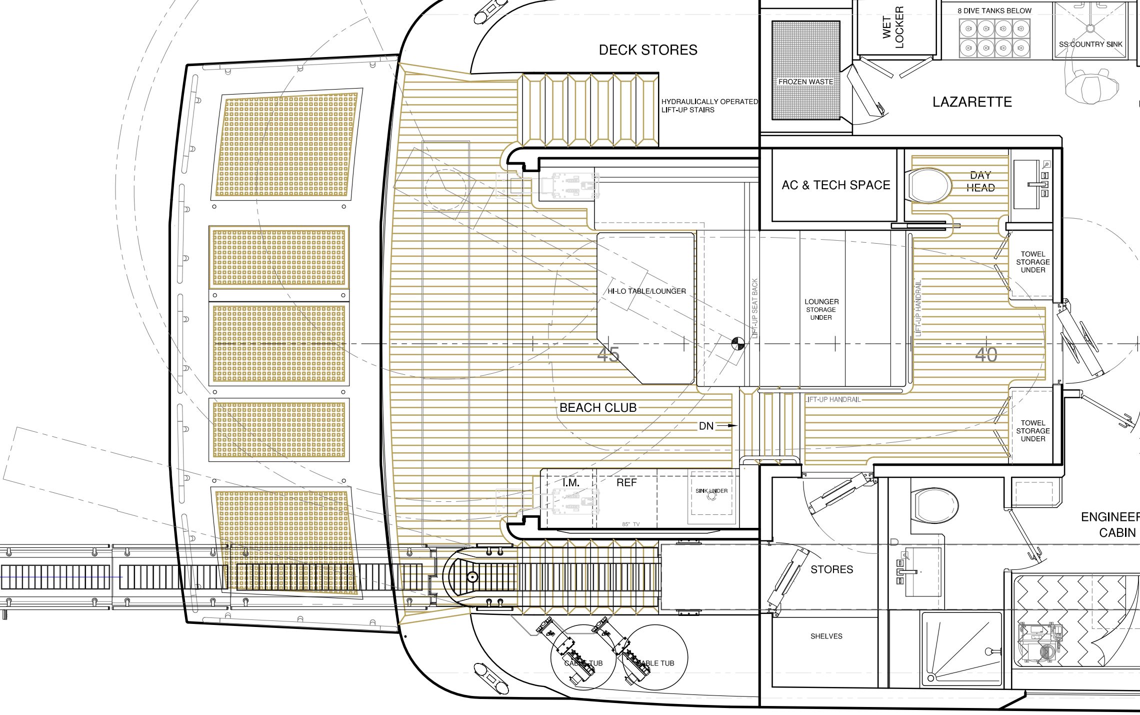
DECK STORES
HYDRAULICALLY OPERATED
LIFT-UP STAIRS
FROZEN WASTE
WET
LOCKER
8 DIVE TANKS BELOW
SS COUNTRY SINK
LAZARETTE
AC & TECH SPACE
DAY
HEAD
TOWEL
STORAGE
UNDER
HI-LO TABLE/LOUNGER
LIFT-UP SEAT BACK
LOUNGER
STORAGE
UNDER
LIFT-UP HANDRAIL
45
40
BEACH CLUB
DN
LIFT-UP HANDRAIL
TOWEL
STORAGE
UNDER
I.M.
REF
SINK UNDER
85" TV
ENGINEER
CABIN
STORES
SHELVES
CABLE TUB
CABLE TUB

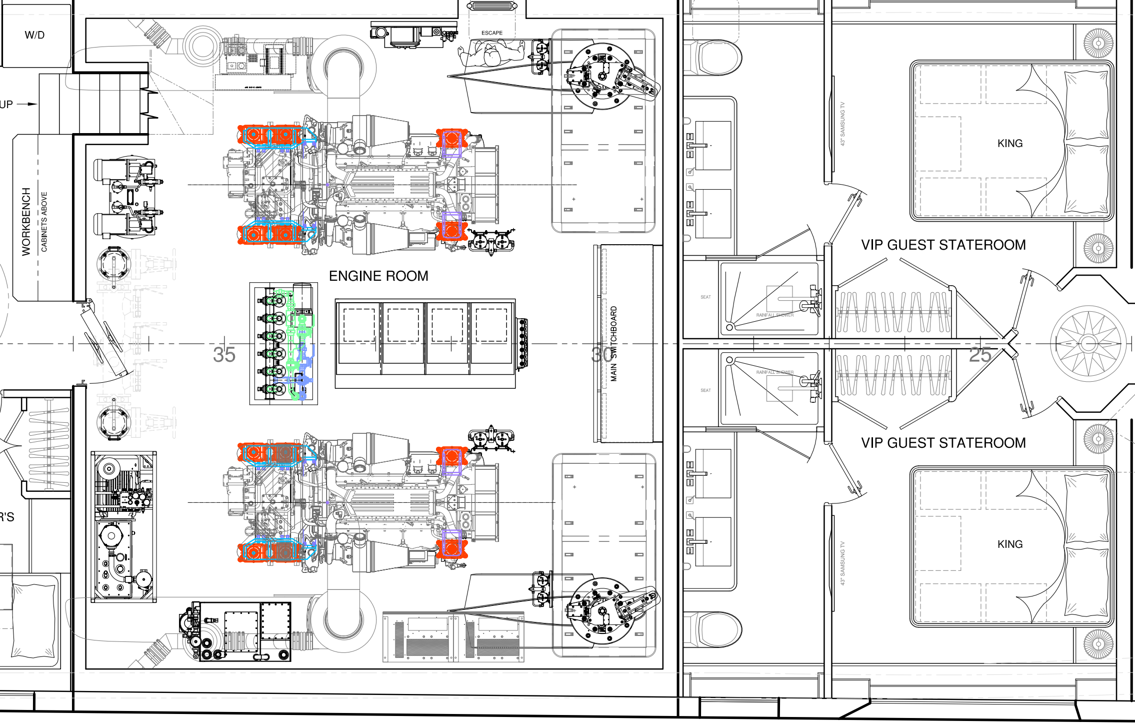
W/D
UP
WORKBENCH
CABINETS ABOVE
ESCAPE
ENGINE ROOM
35
30
MAIN SWITCHBOARD
R'S
43" SAMSUNG TV
KING
VIP GUEST STATEROOM
SEAT
RAINFALL SHOWER
25
SEAT
RAINFALL SHOWER
VIP GUEST STATEROOM
43" SAMSUNG TV
KING

BEL

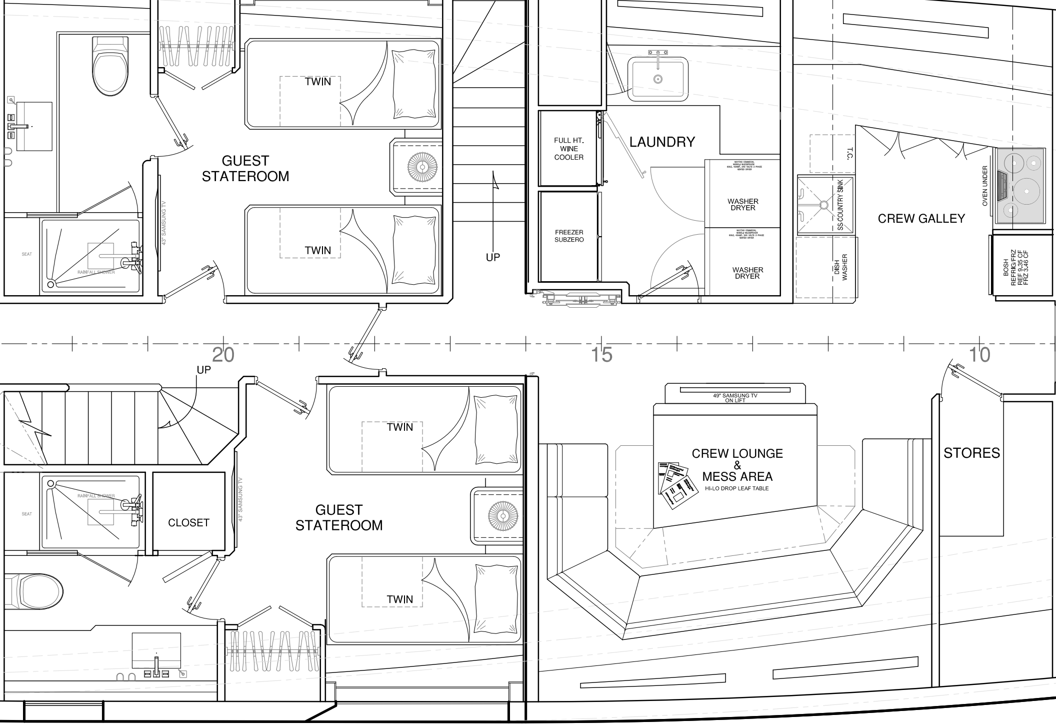
TWIN
GUEST STATEROOM
43" SAMSUNG TV
SEAT
RAINFALL SHOWER
TWIN
UP
FULL HT. WINE COOLER
FREEZER SUBZERO
LAUNDRY
WASHER DRYER
WASHER DRYER
T.C.
SS COUNTRY SINK
DISH WASHER
CREW GALLEY
OVEN UNDER
BOSH REFRIG/FRZ REF 9.35 CF FRZ 3.46 CF
20
15
10
UP
TWIN
SEAT
RAINFALL SHOWER
CLOSET
43" SAMSUNG TV
GUEST STATEROOM
TWIN
49" SAMSUNG TV ON LIFT
CREW LOUNGE & MESS AREA
HI-LO DROP LEAF TABLE
STORES

OW DECK

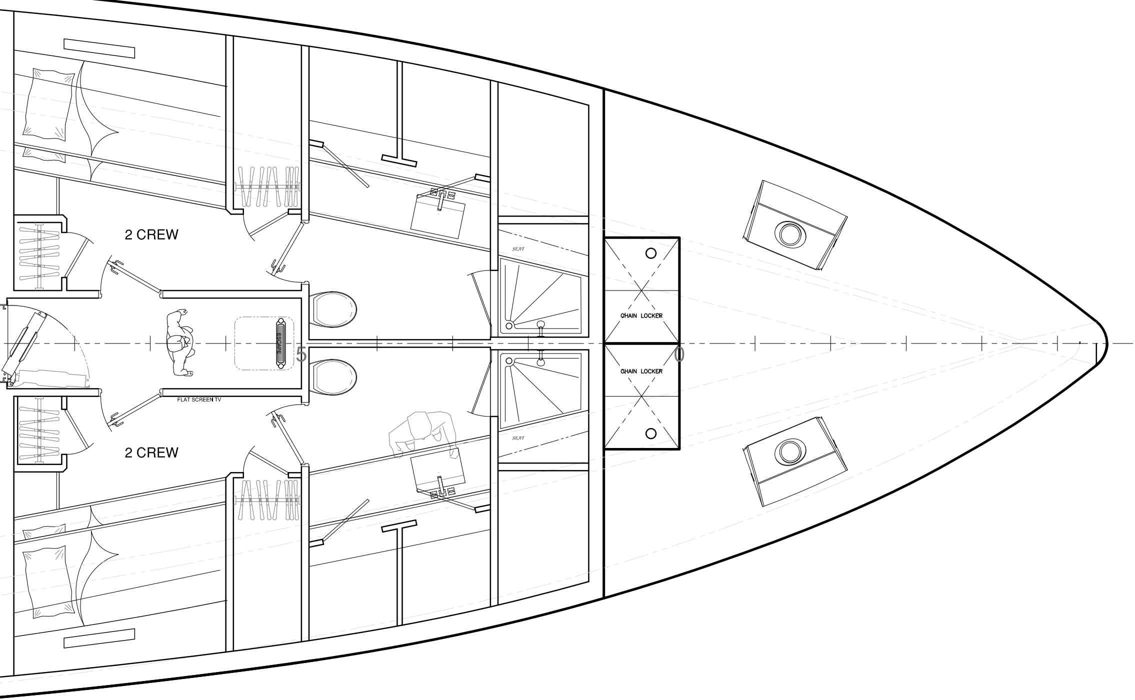
2 CREW
SEAT
CHAIN LOCKER
ESCAPE
5
0
CHAIN LOCKER
FLAT SCREEN TV
SEAT
2 CREW

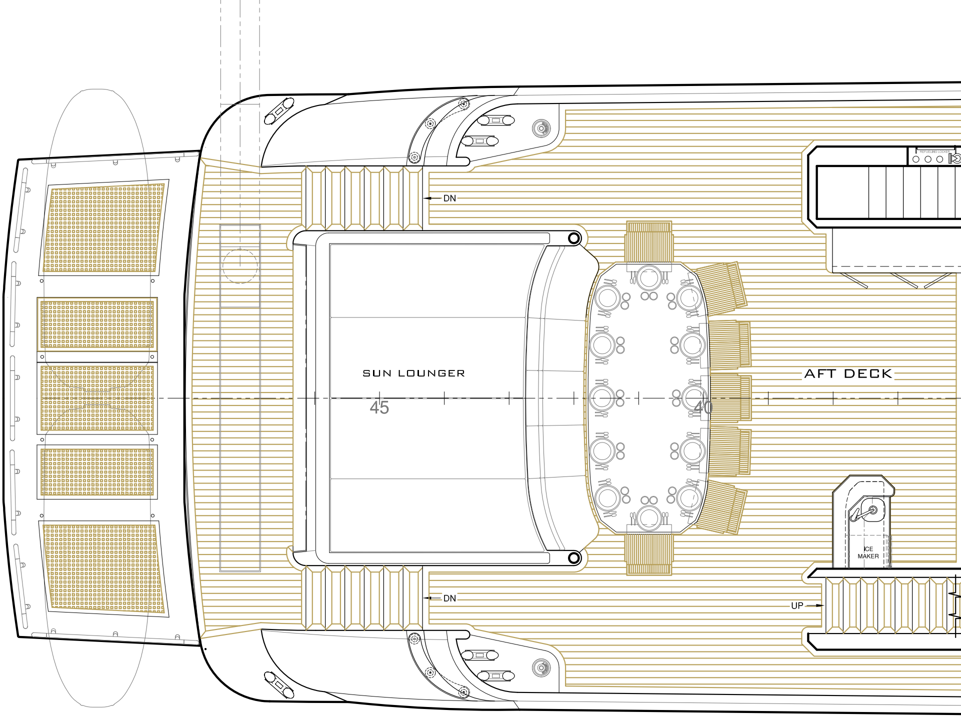
REFUELING LOCKER
DN
SUN LOUNGER
AFT DECK
45
40
ICE MAKER
DN
UP

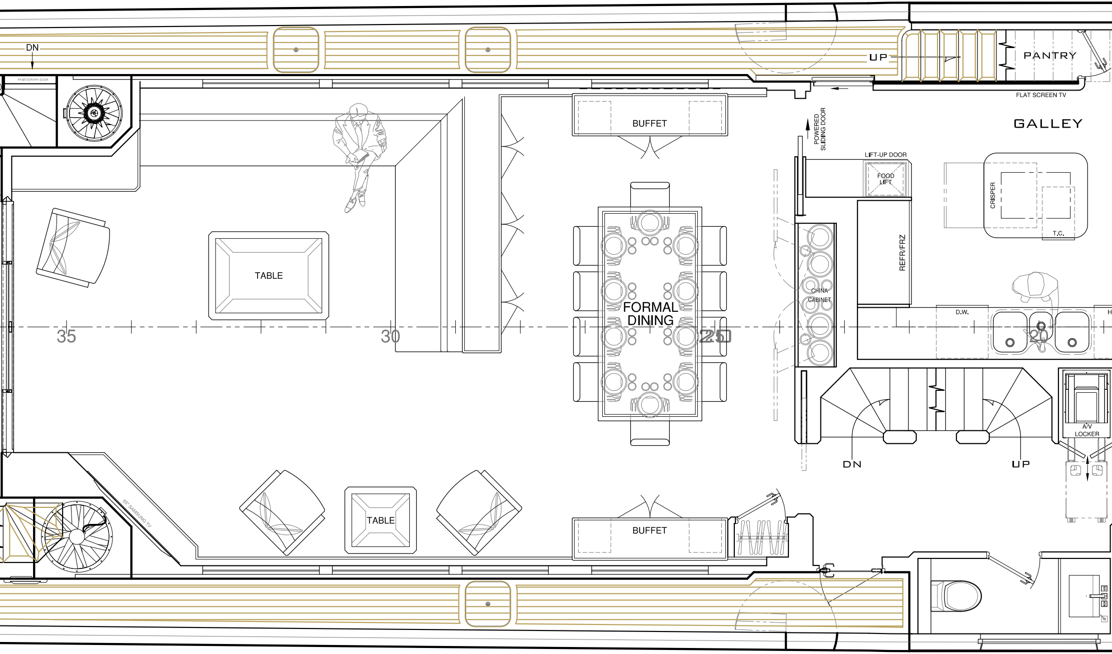
DN
PANTOGRAPH DOOR
UP
PANTRY
FLAT SCREEN TV
GALLEY
BUFFET
POWERED SLIDING DOOR
LIFT-UP DOOR
FOOD LIFT
CRISPER
T.C.
REFR/FRZ
CHINA CABINET
D.W.
H
TABLE
FORMAL DINING
35
30
25
20
DN
UP
A/V LOCKER
65" SAMSUNG TV
TABLE
BUFFET

MAIN DECK

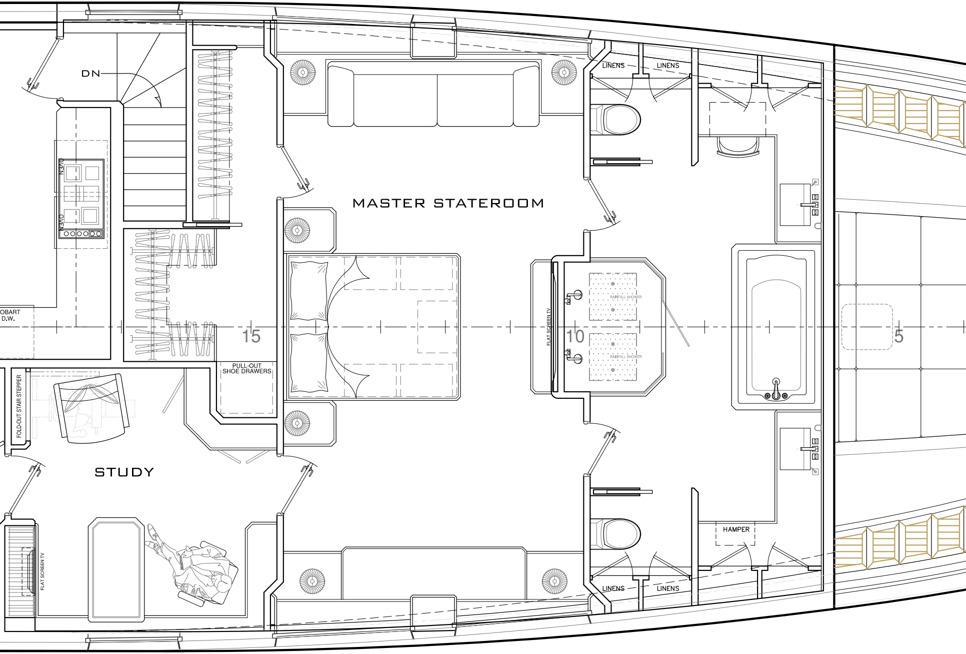
DN
OVEN
OVEN
OBART
D.W.
15
PULL-OUT
SHOE DRAWERS
FOLD-OUT STAIR STEPPER
STUDY
FLAT SCREEN TV
MASTER STATEROOM
FLAT SCREEN TV
10
RAINFALL SHOWER
RAINFALL SHOWER
LINENS
LINENS
LINENS
LINENS
HAMPER
5

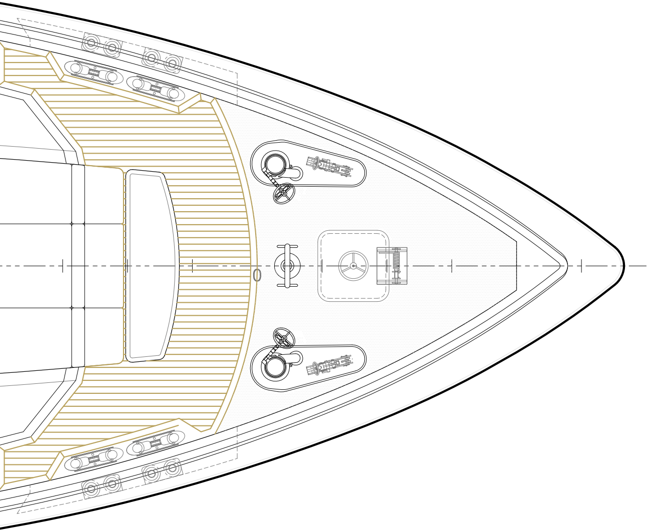
0

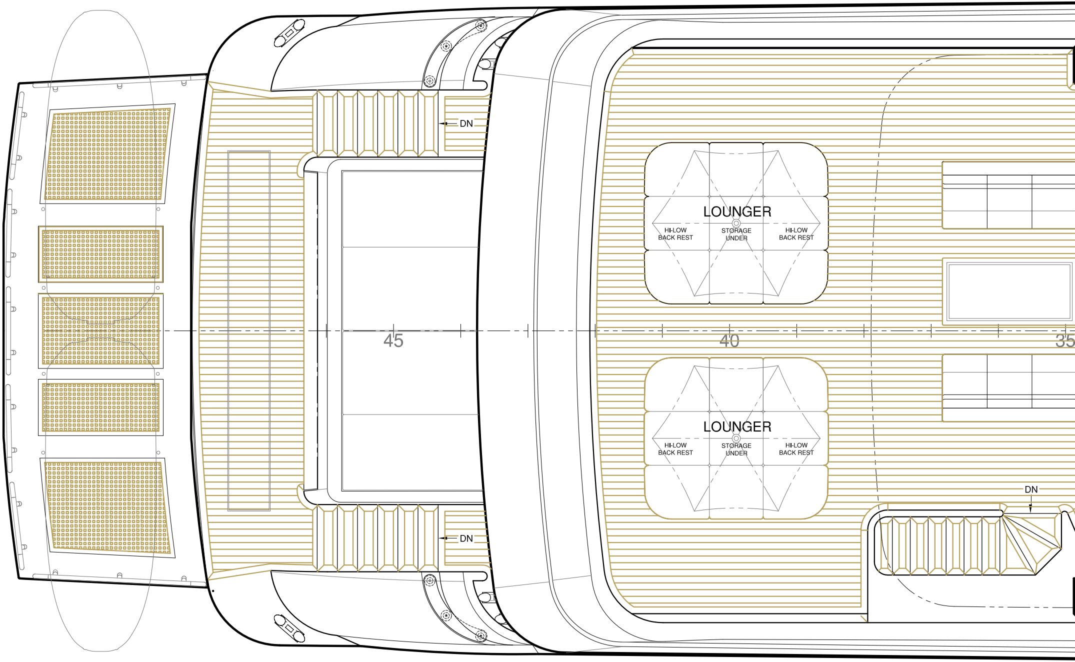
DN
LOUNGER
HI-LOW
BACK REST
STORAGE
UNDER
HI-LOW
BACK REST
45
40
35
LOUNGER
HI-LOW
BACK REST
STORAGE
UNDER
HI-LOW
BACK REST
DN
DN

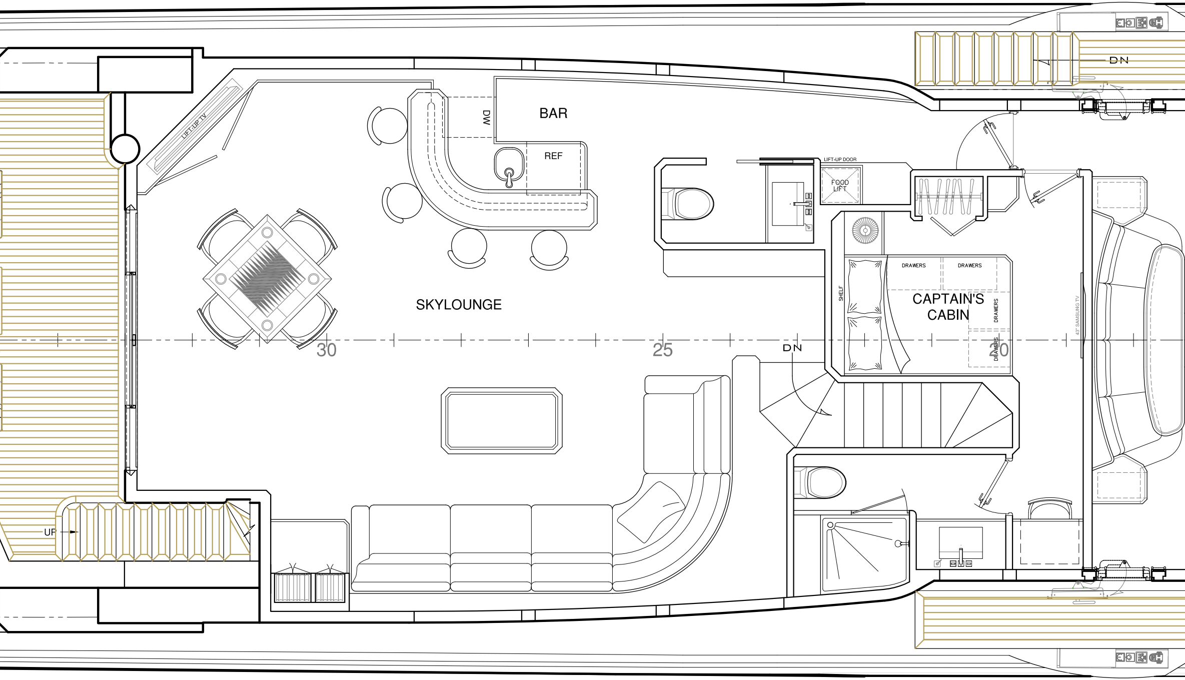
LIFT-UP TV
DW
BAR
REF
LIFT-UP DOOR
FOOD LIFT
DN
SKYLOUNGE
DRAWERS
DRAWERS
SHELF
CAPTAIN'S CABIN
DRAWERS
DRAWERS
43" SAMSUNG TV
30
25
DN
20
UP

01 DECK

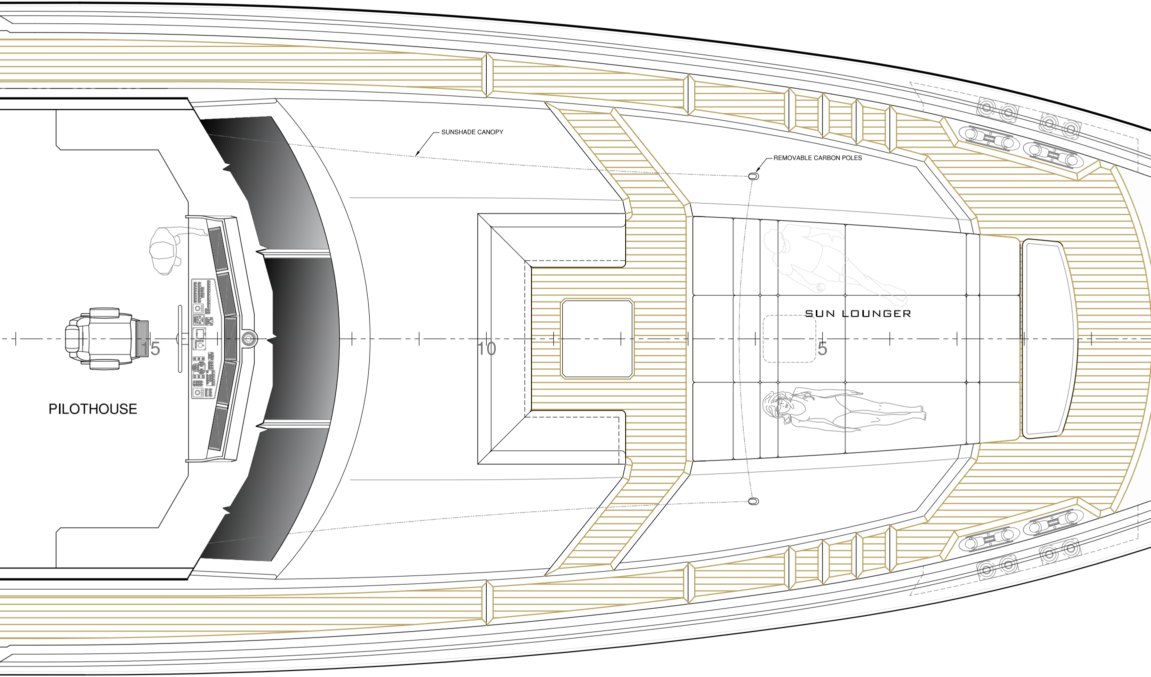
SUNSHADE CANOPY
REMOVABLE CARBON POLES
PILOTHOUSE
15
10
SUN LOUNGER
5

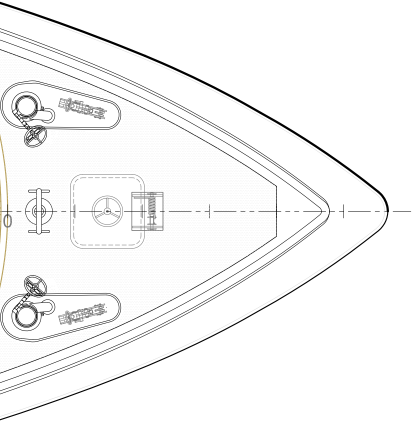
0

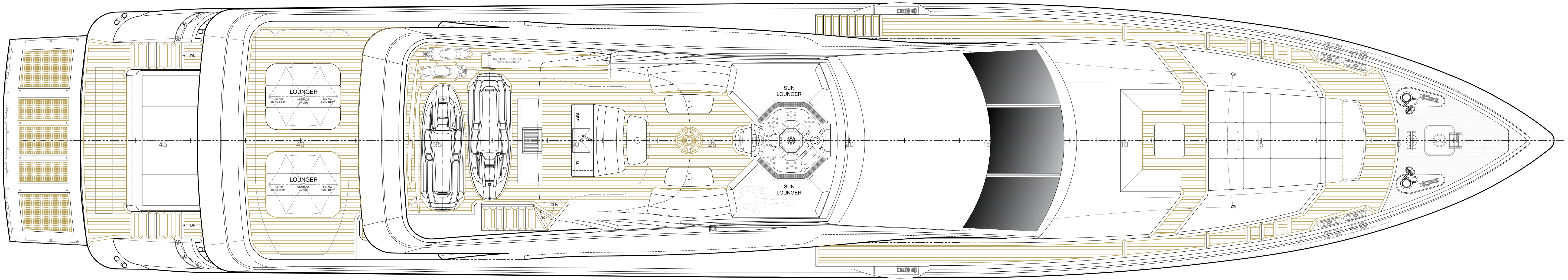
DN
DN
45
LOUNGER
HI-LOW BACK REST
STORAGE UNDER
HI-LOW BACK REST
40
LOUNGER
HI-LOW BACK REST
STORAGE UNDER
HI-LOW BACK REST
NAUTICAL STRUCTURES
3000 # SWL CRANE
35
REF
30
I.M.
DN
25
SUN LOUNGER
SUN LOUNGER
20
15
10
5
0

02 DECK - OPTION A